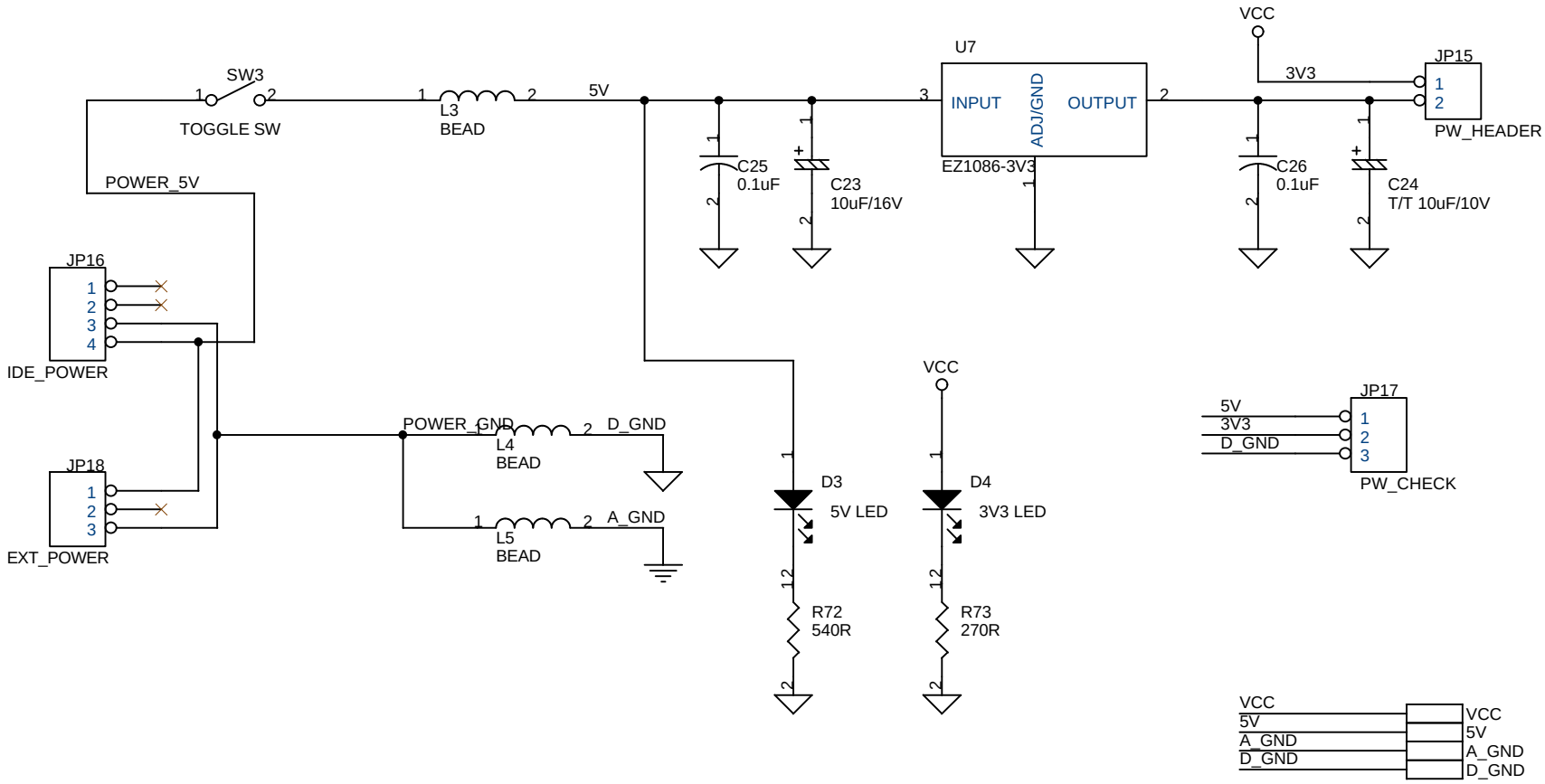

VOISO SEMICON CO., LTD

Title
CODEC

Size	Document Number	Rev
A	MEDE BY Jong-Seuk Park	1.0

Date: Friday, June 08, 2001 Sheet 4 of 5